DRAWING NO.
SU1896-56

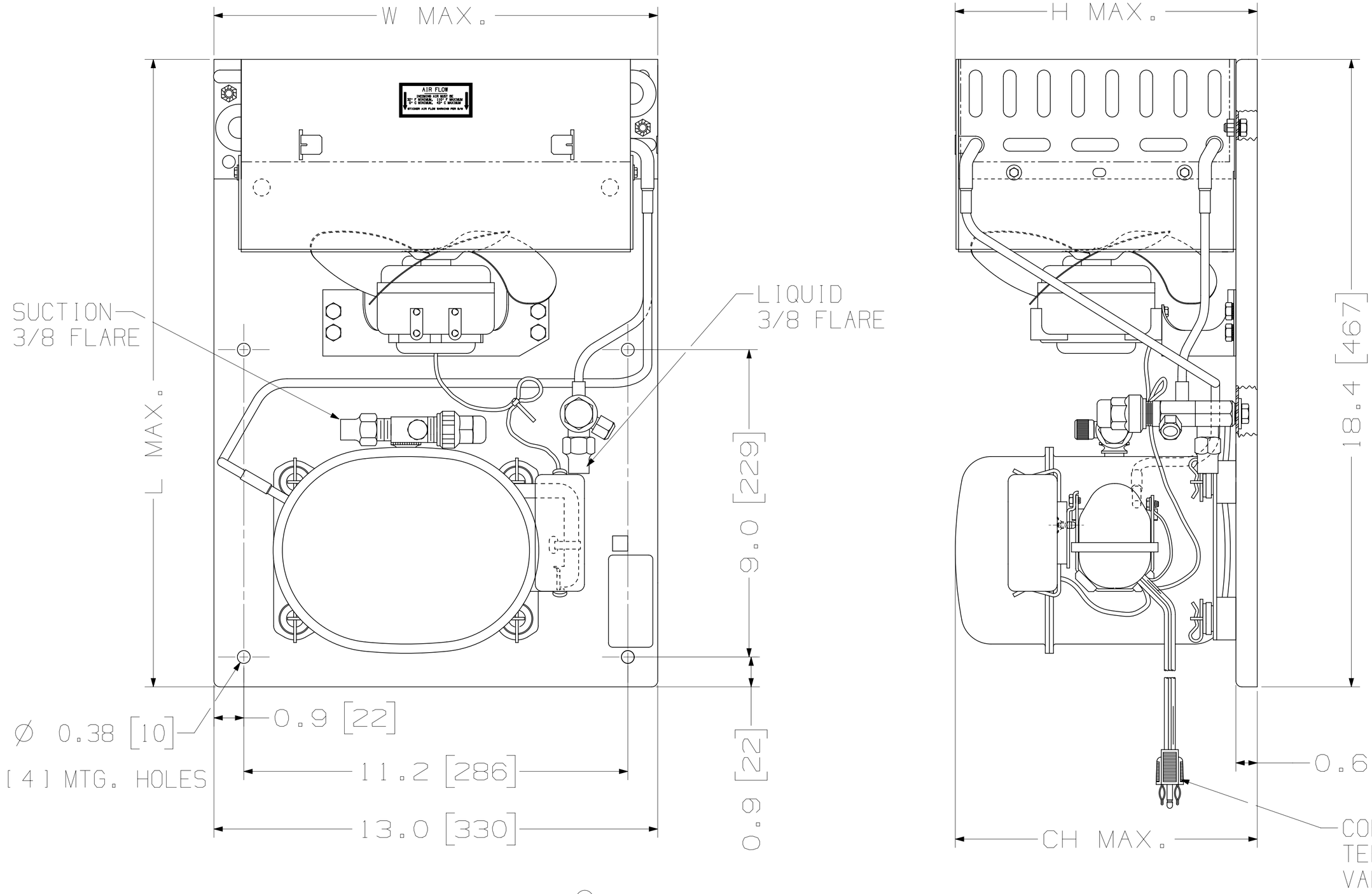

L	W	H	CH
18.4 [467]	13.9 [330]	12.0 [225]	12.0 [225]

2D,VNX6

Q.A. SYMBOLS

- ✱ = CATEGORY I
- ▲ = CATEGORY II
- ■ = CATEGORY III
- = CATEGORY IV

AE

NOTE:
DIMENSIONING = INCHES [MILLIMETERS]

REL	LT	LC	CHANGE	DATE
D	--	EC35463 SU CREATED IN NX		TS 02NOV10
C	6B	#242568-01 DIMENSIONS WERE CORRECTED		NAVEEN 03AUG04
B	6B	#228952-1 ADDED CORD TIE		JEL 7/19/96
A	-	#225939 REVISED POWER CORD DATA		W.E.M. 12-4-92
		#224921		----

THIS DRAWING OR PRINT IS THE PROPERTY OF TECUMSEH PRODUCTS COMPANY (TECUMSEH) AND CONTAINS INFORMATION BELONGING TO TECUMSEH. (1) IS MADE AVAILABLE TO THE RECIPIENT ONLY FOR USE IN THE SPECIFIC CONDITION THAT NEITHER IT NOR THE INFORMATION THEREIN SHALL BE DISCLOSED OR MADE AVAILABLE TO THIRD PARTIES WITHOUT THE SPECIFIC WRITTEN CONSENT OF TECUMSEH, AND (2) SHALL NOT BE USED EXPRESSLY FOR SPECIFICALLY APPROVED IN WRITING BY TECUMSEH AND (3) SHALL NOT BE COPIED OR DUPLICATED IN ANY MANNER WHATSOEVER WITHOUT THE SPECIFIC WRITTEN CONSENT AND (4) SHALL BE RETURNED TO TECUMSEH OR THEREOF TO TECUMSEH AT THE SUPPLIER'S REQUEST WHEN SUPPLIER LATTERS REQUEST MAY SIMPLY AFTER

DIS.CODE

DO NOT SCALE THIS DRAWING ALL FERROUS MATERIALS MUST NOT EXHIBIT RUST AS RECEIVED OR AT COMPRESSOR ASSEMBLY.

NAME: HERMETIC CONDENSING UNIT

DWN.	CK.	APR.	SCALE
A.S.C. 3/5/91	McCOUGHEY 4/1/97	BLANDEN	1"=2"

THIS PRINT SUPERSEDES ALL PRINTS PRIOR TO

TECUMSEH PRODUCTS CO.

MATERIAL: NOTED

DRAWING NO. SU1896-56